CliniCool LABRepCo

CUTSHEET

Interior Cutsheet
Compact Manual Defrost Pharmacy/Vaccine Freezer
LHP-2-FM-PH

Front View

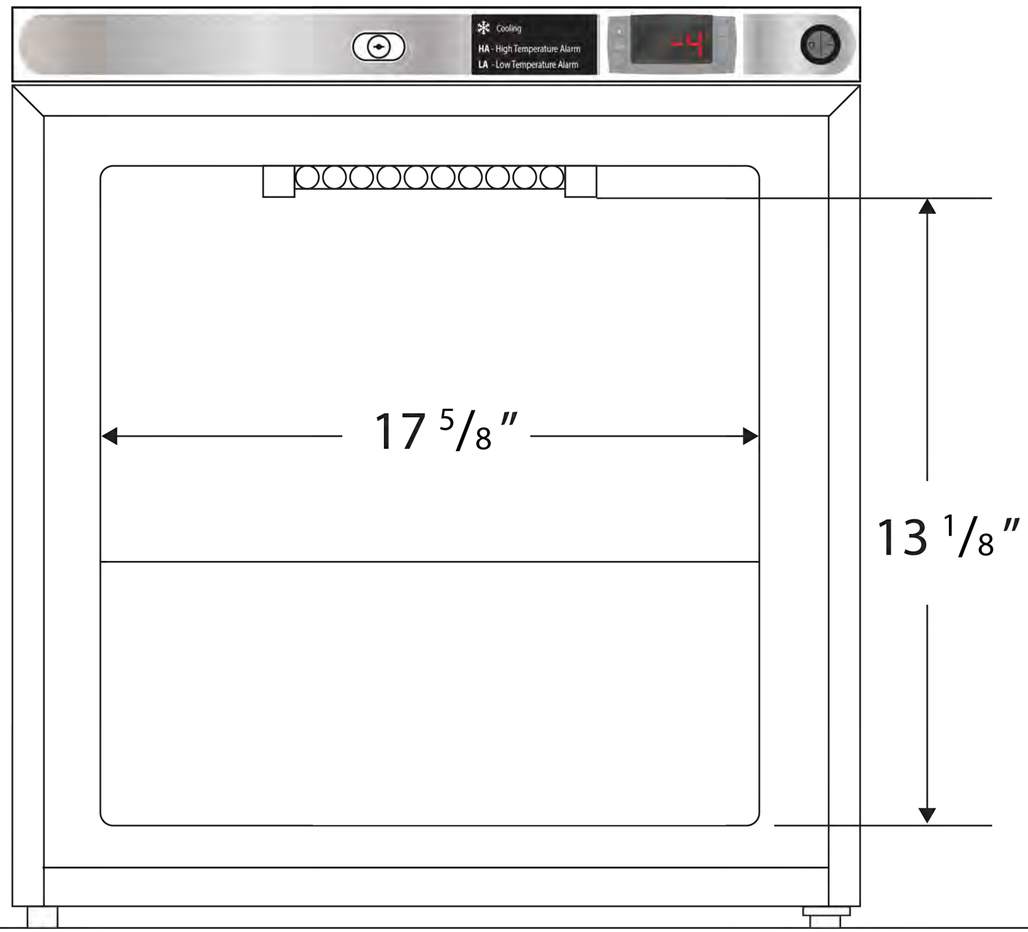

Side View

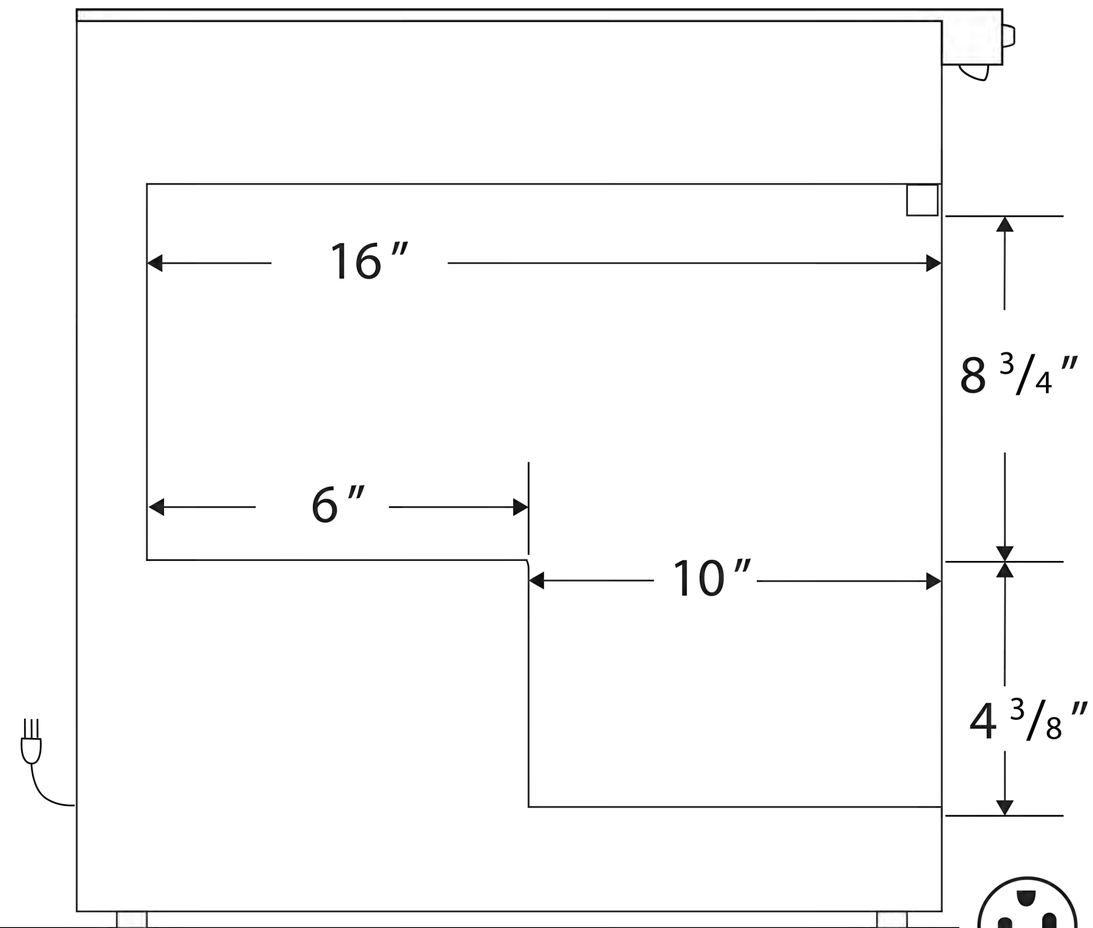

115VAC/60Hz/1PH
NEMA-5-15P

Cu. Ft	Defrost	Door	Int Door	Shelves	Interior Dim.			Refrigerant	H.P.	Amps	Weight
					W″	D″	H″				
1.7	Manual	1 Solid	0	2 Adj +Footed Bottom	17 5/8	16	13 1/8	R600a	1/8	1	80 lbs.

Note: Interior dimensions are estimates and subject to change without notice