LABRepCo
One Company • Many Solutions

CUTSHEET

Interior Ultra Touch
Solid Door Laboratory Refrigerator
LHT-12-SD

Front View

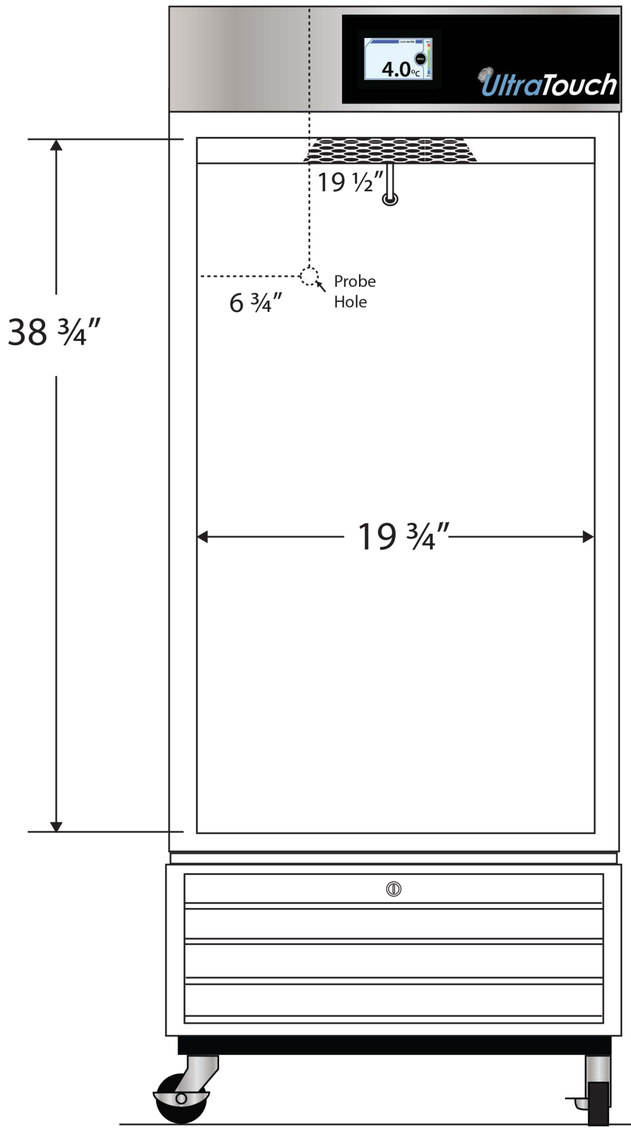

Side View

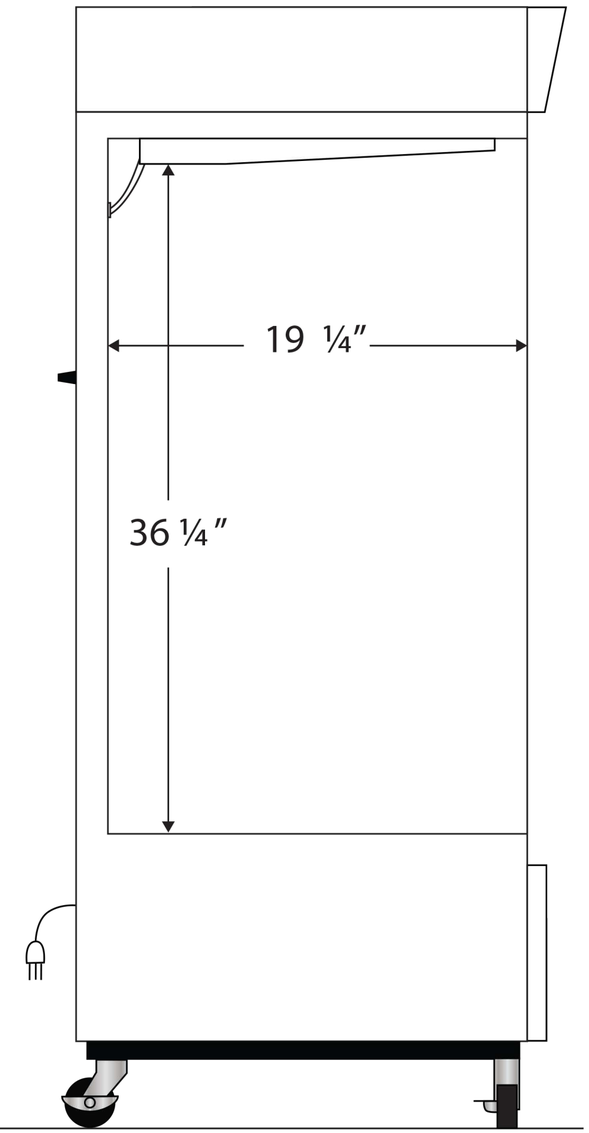

115VAC/60Hz/1PH
NEMA-5-15P

Cu. Ft	Defrost	Door	Int Door	Shelves	Interior Dim.			Refrigerant	H.P.	Amps	Weight
					W"	D"	H"				
12	Cycle	1 Solid	0	3 Adj	19 ¾	19 ¼	36 ¼	R290	⅕	3	187 lbs.

Note: Interior dimensions are estimates and subject to change without notice